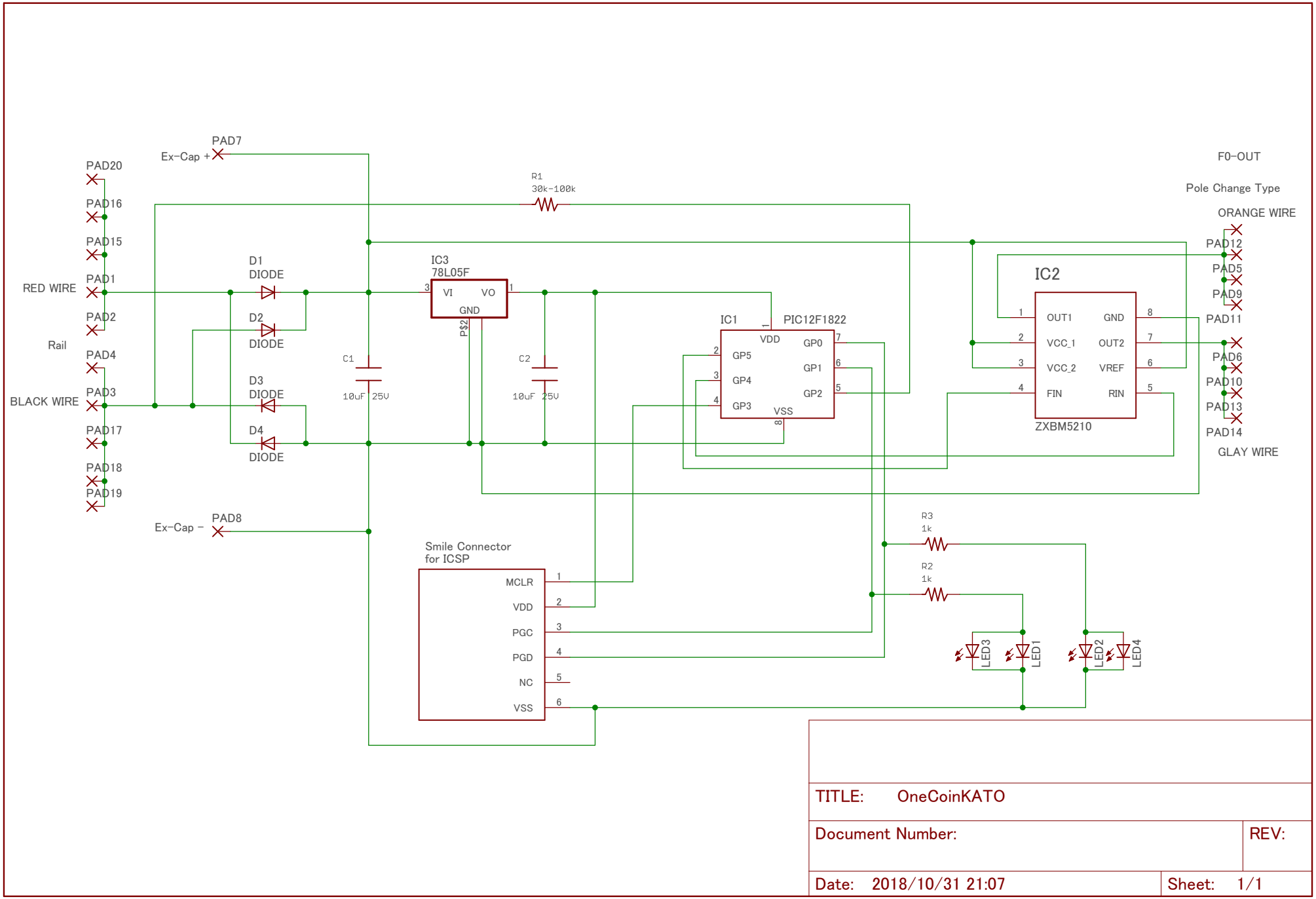

2018/12/08 10:48 C:¥Users¥nucky¥OneDrive¥eagle¥data¥OneCoinDec¥OneCoinKATO-revB¥OneCoinKATO.sch (Sheet: 1/1)