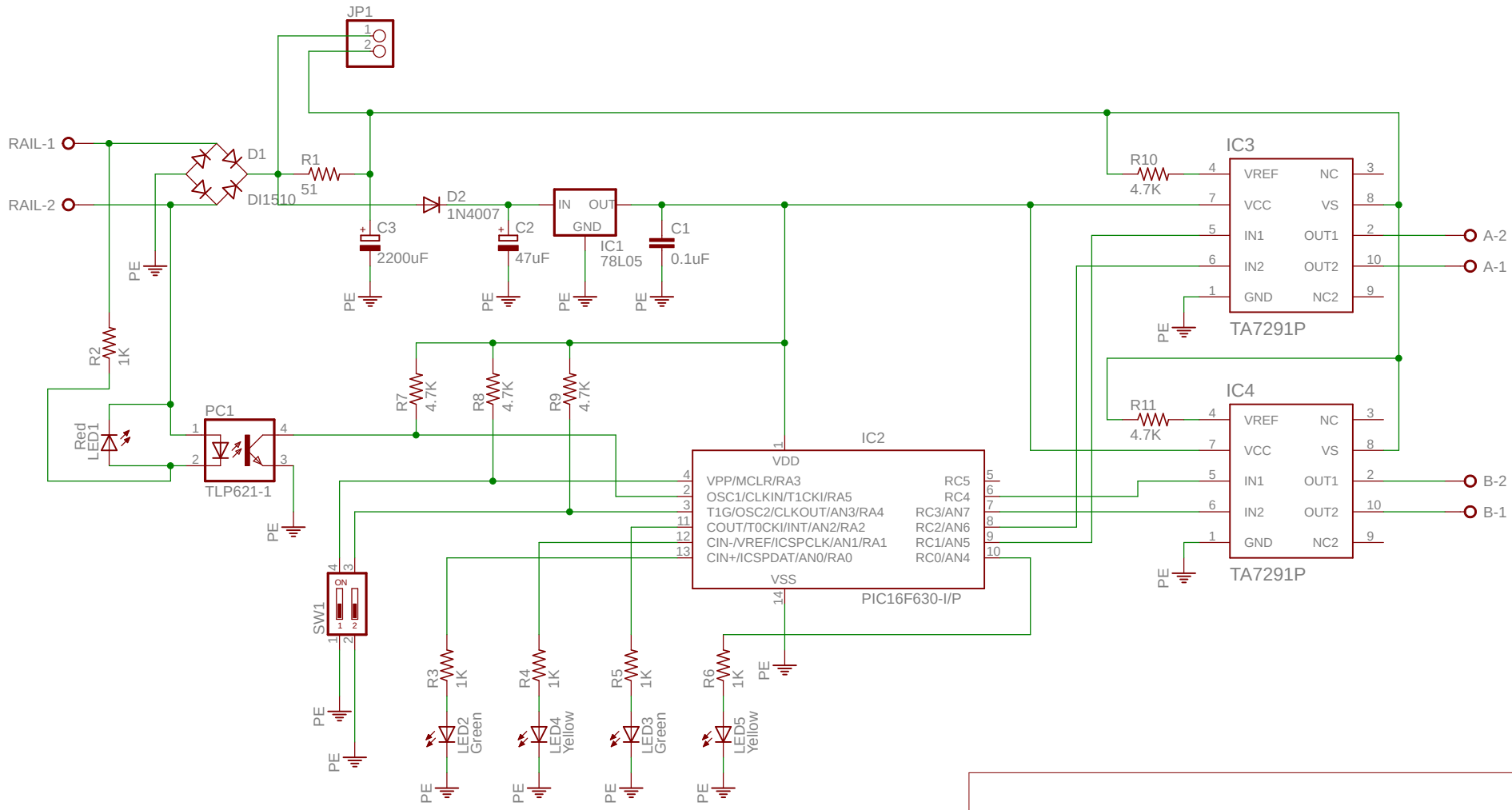

TITLE: FPM_Decorder_2

Document Number:

REV:

Date: 2015/02/07 0:51:34

Sheet: 1/1