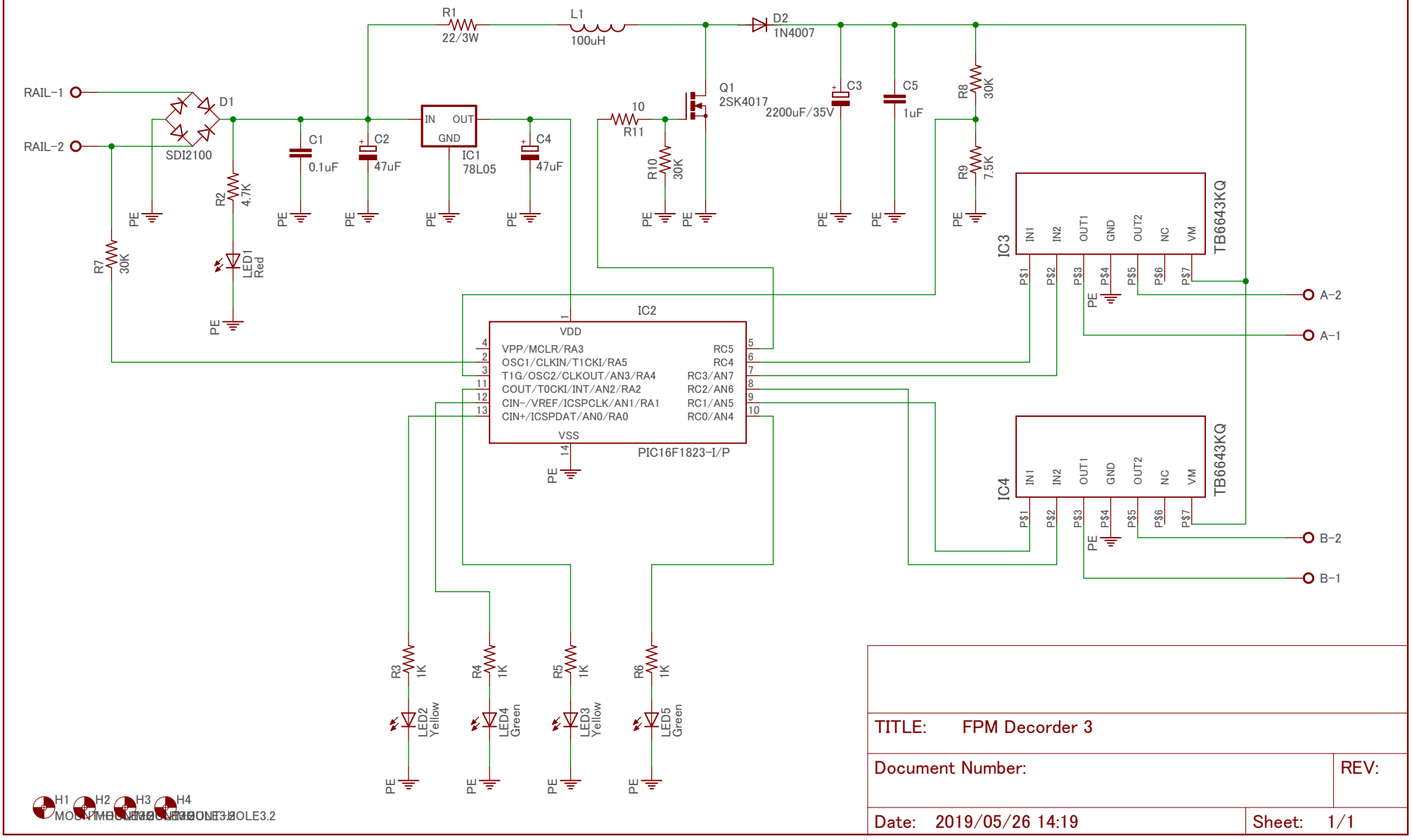

TITLE: FPM Decorder 3

Document Number:

REV:

Date: 2019/05/26 14:19

Sheet: 1/1